K and PD Series

RF Power Dividers
146–174 MHz

Kathrein RF power dividers are designed for use in a number of professional applications including multi-element antenna arrays and radiating cable systems and other cases where efficient broadband power splitting is required. These dividers feature low insertion loss and excellent impedance match. Careful and conservative mechanical designs assure a long service life with high reliability and stability in even the most difficult environmental conditions.

Kathrein has provided thousands of these rugged and reliable RF power dividers for communications and broadcasting systems over the past 40 years and we welcome the opportunity to help you find the best and most cost-effective solutions for your system requirements.

PDL3-333/50

PDM2-55/50

In addition to the standard models listed, Kathrein Scala Division offers a number of special types with optional features designed to facilitate system design and operation. These include:

- **Unequal power splits.** Common examples include 75%/25%, 90%/10%, 50%/25%/25%, and 50%/25%/12.5%/12.5%, etc. Almost any split ratio is available on special order. Very useful for special antenna arrays and in the design of radiating cable systems.
- **1KW-rated power dividers.** Two to eight-way equal splits, 7/8" EIA or 7/16 DIN input.
- **Built-in impedance transformation** for 50Ω input and 75Ω outputs, or for 75Ω input and 50Ω outputs. A handy tool to accommodate the use of cost effective 75-ohm CATV type coaxial cables. Kathrein Scala Division's CX-series in-line coax transformers are also available for interfacing 50Ω and 75Ω RF system components.
- **Special mounting arrangements** for alternate mast sizes, etc.

K625521

10244-A
936.312/a

Kathrein Inc., Scala Division Post Office Box 4580 Medford, OR 97501 (USA) Phone: (541) 779-6500 Fax: (541) 779-3991
Email: communications@kathrein.com Internet: www.kathrein-scala.com

PDM Series

RF Power Dividers
146–174 MHz

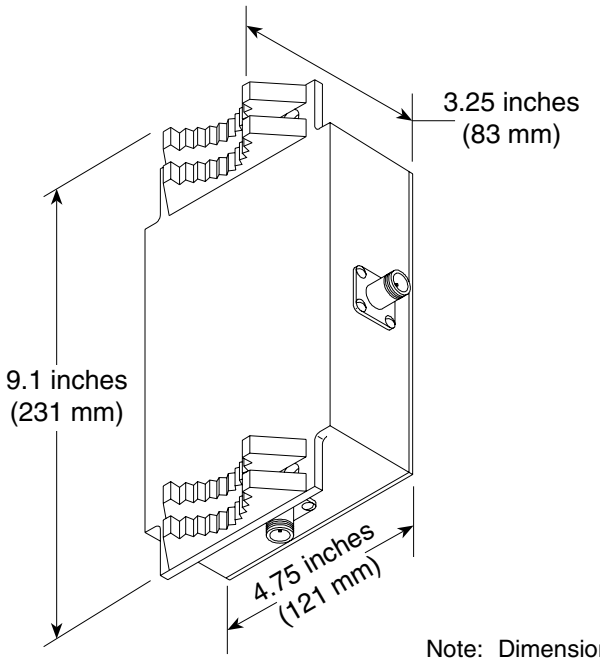

Note: Dimensions shown do not include connectors.

Specifications:	**PDM2-55/50**	**PDM3-333/50**	**PDM4-2222/50**
Frequency range	147–174 MHz	147–174 MHz	147–174 MHz
Impedance	50 ohms	50 ohms	50 ohms
Insertion loss	<0.5 dB	<0.5 dB	<0.5 dB
Split	50%/50%	33.3%/33.3%/33.3%	25%/25%/25%/25%
VSWR	<1.2:1	<1.2:1	<1.2:1
Maximum input power	500 watts	500 watts	500 watts
Connector	N female	N female	N female
Weight	7 lb (3.2 kg)	7 lb (3.2 kg)	7 lb (3.2 kg)
Dimensions*	9.1 x 4.75 x 3.25 inches (231 x 121 x 83 mm)	9.1 x 4.75 x 3.25 inches (231 x 121 x 83 mm)	9.1 x 4.75 x 3.25 inches (231 x 121 x 83 mm)
Shipping dimensions	12 x 9 x 4 inches (305 x 229 x 102 mm)	12 x 9 x 4 inches (305 x 229 x 102 mm)	12 x 9 x 4 inches (305 x 229 x 102 mm)
Shipping weight	8 lb (3.63 kg)	8 lb (3.63 kg)	8 lb (3.63 kg)
Mounting	For masts of 1.25 to 2.375 inch (32 to 60 mm) OD.		

* Excludes connectors and bracket.

Order Information:

Model	Description
PDM2-55/50	2-way RF Power Divider
PDM3-333/50	3-way RF Power Divider
PDM4-2222/50	4-way RF Power Divider

All specifications are subject to change without notice. The latest specifications are available at www.kathrein-scala.com.

Kathrein Inc., Scala Division Post Office Box 4580 Medford, OR 97501 (USA) Phone: (541) 779-6500 Fax: (541) 779-3991
Email: communications@kathrein.com Internet: www.kathrein-scala.com